Identification of Acetylcholine Receptor Channel-Lining Residues in the M1 Segment of the β-Subunit†

Hui Zhang and Arthur Karlin*

Center for Molecular Recognition, Columbia University, 630 W. 168th Street, New York, New York 10032

Received September 23, 1997; Revised Manuscript Received October 15, 1997⊗

ABSTRACT: The substituted cysteine accessibility method (SCAM) was applied to the first membrane-spanning segment (M1) of the mouse-muscle acetylcholine (ACh) receptor β subunit. One at a time, each residue from βR219 to βP247, except βC233, was mutated to Cys, and the mutant β subunits were expressed together with wild-type α, γ, and δ in *Xenopus* oocytes. All 28 mutants yielded functional receptors. The accessibility of the substituted Cys to the methanethiosulfonate (MTS) derivatives, MTS ethylammonium (MTSEA), MTS ethyltrimethylammonium (MTSET), and MTS ethylsulfonate (MTSES), added extracellularly in the absence or the presence of ACh, was inferred from their irreversible effects on ACh-induced current. Three consecutive residues close to the extracellular end of M1, βF224C, βY225C, and βL226C, reacted both in the absence and presence of ACh, and one deeper residue, βV229C reacted only in the presence of ACh. βV229C also reacted with 2-aminoethyl-2-aminoethanethiosulfonate (AEAETS) and with 2-hydroxyethyl MTS (MTSEH). The rate constants for the reactions of βV229C with MTSEA, which permeates the open channel, and with MTSEH, which is uncharged, were independent of membrane potential. The rate constant for the reaction of the doubly positively charged AEAETS, however, was dependent on membrane potential, consistent with the exposure of βV229C in the open channel. The N-terminal third of βM1, like that of αM1, contributes to the lining of the channel and undergoes structural changes during gating.

The nicotinic acetylcholine (ACh)[1] receptor contains a high-conductance, cation-selective channel, which opens when the receptor binds ACh. The conductance, selectivity, and the opening and closing of the channel should be largely explainable in terms of the nature and arrangement of the amino acid residues lining the channel. These residues are contributed by each of the five subunits of the receptor, which surround the channel (*1*, *2*). In the muscle-type receptors, the subunit composition is $\alpha_2\beta\gamma\delta$, and the four types of subunits have similar sequences and identical topologies (*3*). The N-terminal half of each subunit is extracellular; the C-terminal half consists of three membrane-spanning segments (M1, M2, and M3), a large cytoplasmic loop, a fourth membrane-spanning segment (M4), and a short, extracellular tail (Figure 1). The channel is formed among the twenty membrane-spanning segments contributed by the five subunits.

The M2 segments play a major role in the structure and function of the channel. The mutations of several residues in M2 of different subunits altered channel conductance, selectivity, or binding of channel blockers, and some of these same residues were photolabeled by channel blockers (*4*−*8*). Mostly in agreement with the results of mutagenesis and photolabeling, 10 of 22 residues in and flanking αM2 were identified as lining the channel of the mouse-muscle ACh receptor by the substituted cysteine accessibility method (SCAM) (*9*).

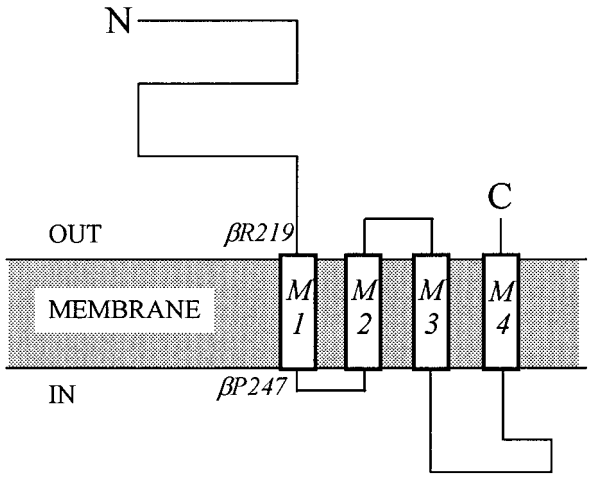

FIGURE 1: Schematic representation of the common topology of the subunits of the ACh receptor. The approximate locations relative to the membrane of the first (βR219) and last (βP247) of the consecutive βM1 residues mutated to cysteine are indicated.

In SCAM, continuous stretches of residues are mutated one at a time to Cys, and the accessibility of the substituted Cys to small, polar, sulfhydryl-specific reagents is determined by the irreversible effects of these reagents on the function of the expressed mutants (*10*). The reagents are presumed to react with Cys at the water-accessible surface of the receptor much faster than with Cys at the lipid-accessible surface or in the protein interior because the reagents are polar and, in the case of methanethiosulfonate derivatives (*11*), because the reaction with ionized $-S^-$ is 9 orders of magnitude faster than with the un-ionized −SH (*12*). The

† This work was supported in part by research grants from NIH (NS07065), from the Muscular Dystrophy Association, and from the McKnight Endowment Fund for Neuroscience.

* To whom correspondence should be addressed. Telephone: (212) 305-3973. FAX: (212) 305-5594.

⊗ Abstract published in *Advance ACS Abstracts*, December 1, 1997.

[1] Abbreviations: ACh, acetylcholine; AEAETS, 2-aminoethyl, 2-aminoethanethiosulfonate; dTC, *d*-tubocurarine; MTS, methanethiosulfonate; MTSEA, MTS ethylammonium; MTSEH, 2-hydroxyethyl MTS; MTSES, MTS ethylsulfonate; MTSET, MTS ethyltrimethylammonium; SCAM, substituted cysteine accessibility method.

S0006-2960(97)02357-X CCC: $14.00 © 1997 American Chemical Society

channel lining is a water-accessible surface in the membrane-spanning domain of the receptor (*13*).

The M1 segments also line the channel. Specifically, in the open state of the receptor, residues at the extracellular end of αM1 were photolabeled by an azido derivative of the noncompetitive inhibitor, quinacrine (*14*), and mutations in αM1 alter the binding of quinacrine (*15*). Quinacrine, like other noncompetitive inhibitors of the ACh receptor, may bind both to a site within the channel and to sites at the receptor−lipid interface (*16, 17*).

The application of SCAM to fifteen consecutive residues of αM1, starting at its extracellular end, resulted in the identification of seven residues that are exposed in the channel (*18*). The channel widens toward its extracellular end (*1*), where it is likely to be encompassed by the extracellular ends of M1 and M2, a pair from each subunit (*9, 13, 18*).

The reactivities of some substituted Cys toward the extracellular end of αM1 and throughout αM2 were very different in the presence and absence of ACh (*9, 18*). These differences are likely to reflect conformational differences in these segments between the open state and closed state of the receptor rather than differences in accessibility controlled by the gate. From the reactivities in the closed state of substituted Cys deep in the channel, we inferred that the gate is close to the cytoplasmic end of the channel (*9*)[2,3]

Although the sequences of M1 and M2 in the different subunits of the muscle-type ACh receptor are very similar (*19*) and the complex is roughly 5-fold symmetrical in the membrane-spanning domain (*1*), the different subunits do not make identical contributions to channel function (*20, 21*). In this paper, we explore whether the M1 segment in the *β* subunit makes a contribution to the channel lining similar to the M1 segment in the α subunit. The single *β* subunit is not directly involved in ACh binding but is critical for functional expression of the receptor (*22*−*25*). We mutated 28 consecutive residues in and flanking *β*M1, one at a time, to Cys and tested the accessibility of these substituted-Cys residues to polar methanethiosulfonate derivatives. We found that *β*M1 lines the cation-conducting pathway of the ACh receptor similarly, but not identically, to αM1. As with αM1, the exposure of *β*M1 is different in the presence and absence of ACh.

EXPERIMENTAL PROCEDURES

cDNAs for the mouse-muscle ACh receptor subunits were a gift from Dr. Toni Claudio. Residues were substituted by cysteine, one at a time, in and flanking the M1 segment of the *β* subunit with the Altered Sites Mutagenesis Kit (Promega). Following mutagenesis, we excised a cassette defined by the restriction enzymes *Kpn*I and *Xho*I and ligated it into wild-type in the pSP64T plasmid cut with the same enzymes. The entire cassette was sequenced to confirm the mutation and to ensure that there were no other mutations. Mutants are named as (subunit)(wild-type residue)(residue number)(mutant residue), in which the residues are designated in the single-letter code.

The in vitro mRNA transcription, oocyte injection, and two-electrode voltage clamp recording of ACh-induced currents were described previously (*10*). Unless otherwise noted, currents were recorded at a holding potential of −40 mV. The oocytes were perfused at 5 mL/min with nominally calcium-free frog Ringer's solution (CFFR: 115 mM NaCl, 2.5 mM KCl, 1.8 mM $MgCl_2$, 1 *μ*M atropine, 10 mM HEPES, adjusted to pH 7.3 with NaOH), at 22−25 °C.

We tested the susceptibility of wild-type and mutant ACh receptors to the MTS reagents applied in the absence and presence of ACh. The sequence of applications to the oocyte was test concentration of ACh for 10−20 s, CFFR for 3 min, test ACh for 10−20 s, CFFR for 3 min, MTS reagent in CFFR in the absence or the presence of ACh (at a concentration at least 5 times its EC_{50}), CFFR for 5 min, test ACh for 10−20 s, CFFR for 3 min, test ACh for 10−20 s. All mutants were tested at two concentrations of ACh, higher than the EC_{50} for the mutant being tested (20 *μ*M or at least three times the EC_{50}) and at the EC_{50}. The average of the peaks of the current elicited by the two test ACh applications before the MTS reagent was compared with the average of the two peaks of the currents elicited by ACh after the MTS reagent. The effect of the MTS reagent was taken as

$$[(I_{\mathrm{ACh,after}}/I_{\mathrm{ACh,before}}) - 1] \quad (1)$$

MTSEA, MTSET, and MTSES were applied at concentrations of 2.5, 1, and 10 mM, respectively. The different concentrations compensated for the different rates of reaction of the MTS reagents with simple thiols in solution (*11*). The MTS reagents were synthesized by the procedures of Stauffer and Karlin (*11*) and were purchased from Toronto Research Chemicals. The syntheses of MTSEH ($HOCH_2CH_2SSO_2CH_3$) and AEAETS ($^+H_3NCH_2CH_2SSO_2CH_2CH_2NH_3^+$) will appear elsewhere.[2]

We used the SPSS/PC+ (SPSS, Inc.) statistical software to analyze the effects of MTS reagents by one-way ANOVA, applying the Dunnett test for significance of differences between the effects of MTS reagents on a mutant from the effects on wild type ($P < 0.05$).

We determined the rate constants for the reactions of MTSEA, MTSEH, and AEAETS with *β*V229C by repeated 20−30-s applications of reagent. To minimize hydrolysis, the half-times of which are about 10 min at room temperature and neutral pH, stocks of the reagents were dissolved in unbuffered water, kept on ice, and diluted 100 times in CFFR just before each application. If S is the number of unreacted substituted Cys after *t* seconds of reaction with reagent X, then

$$S/S_0 = e^{-k[X]t} \quad (2)$$

where *k* is the second-order rate constant. We assume that

$$(I - I_\infty)/(I_0 - I_\infty) = S/S_0 \quad (3)$$

where *I* is the current elicited by ACh after cumulative time *t* of reaction with X, and the subscripts refer to zero time and infinite time (i.e. complete reaction). Since the reagent was present in excess, we determined the pseudo-first-order rate constant (*k′*) by fitting

$$I/I_0 = I_\infty/I_0 + (1 - I_\infty/I_0)\, e^{-k't} \quad (4)$$

to *I*. I_0 was the initial ACh-induced current, and I_∞ was the

[2] Pascual and Karlin, unpublished.
[3] Wilson and Karlin, unpublished.

ACh-induced current obtained the end of the experiment, after applying a high concentration of reagent (2.5 mM MTSEA, 8 mM MTSEH, and 4 mM AEAETS) for 1 min. The second-order rate constants (k) were calculated by dividing the pseudo-first-order rate constants by the concentration of the applied reagent.

We fit the equation

$$k = k_0 \exp(-zF\delta\psi_M/RT) \quad (5)$$

where z is the algebraic charge on the reagent, F is the Faraday, R is the gas constant, and T is the absolute temperature, to the second-order rate constant (k) as a function of the holding potential (ψ_M). δ in the equation is the electrical distance of the charge on the reagent during the reaction of the reagent with the substituted Cys. The fit yields estimates for k_0, the rate constant at $\psi_M = 0$, and for the product $z\delta$.

RESULTS

Expression of Cys-Substitution Mutants

We inferred that an engineered Cys reacted with a MTS reagent if the reagent irreversibly altered the ACh-induced current of oocytes expressing the mutant. We required, therefore, that the Cys-substitution mutants be functional. We found that Cys-substitution was very well tolerated. Of the 28 Cys-substitution mutants, 26 responded robustly to ACh, with maximum ACh-induced current ranging from 1.8 ± 0.7 μA for R220C to 6.2 ± 0.8 μA for L238C, similar to the maximum ACh-induced current of wild type (3.0 ± 0.2 μA). Two mutants yielded only modest maximum currents: Y225C gave 0.9 ± 0.1 μA, and P247C gave 0.8 ± 0.1 μA. For 25 of the mutants, the ratios of $EC_{50,mut}/EC_{50,WT}$ were in the range from 0.3 (L226C) to 9 (Y225C). Three other mutations had greater than 20-fold effects on EC_{50}; for R220C, P232C, and P247C the ratios of $EC_{50,mut}/EC_{50,WT}$ were 23, 31, and 43, respectively (Figure 2).

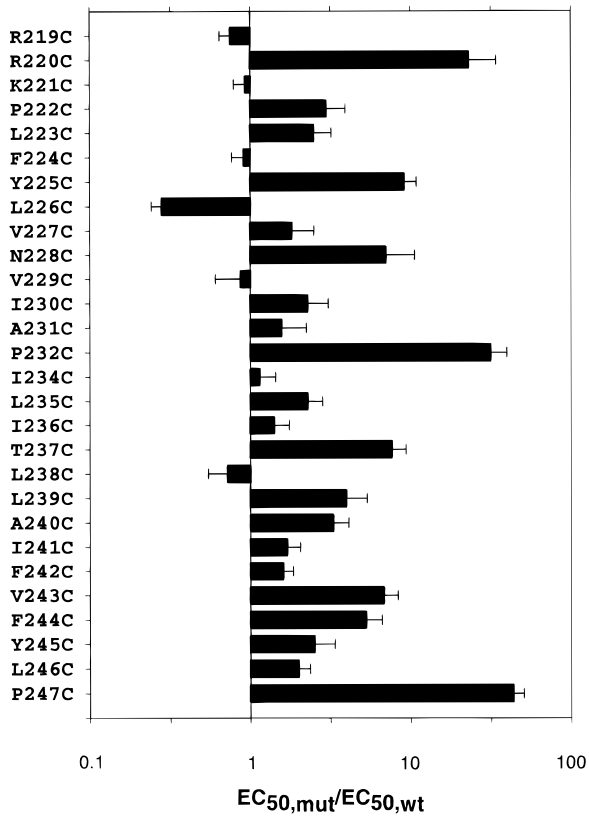

FIGURE 2: Mean concentration of ACh eliciting a half-maximal response (EC_{50}) for the mutants relative to the mean EC_{50} for the wild-type receptor. EC_{50} was determined from the fit of $I/I_{max} = 1/(1 + (EC_{50}/[ACh])^n)$ to the currents elicited by five or six different concentrations of ACh, each applied twice. The standard error of the ratio is shown. The number of independent determinations of EC_{50} for each mutant is at least three. The EC_{50} for wild type was 1.6 ± 0.2 μM (n = 13). P222 to P247 are predicted to be in the membrane-spanning M1 segment.

Reaction of the Mutants with MTSEA

To determine whether or not the reagents reacted with the substituted Cys, we recorded the ACh-induced current before and after exposure to the reagents. In the absence of reagent, the ACh-induced currents were relatively stable. In wild-type receptor, the mean run-down over 40 min in the currents elicited by ACh at its EC_{50} was 4% ± 1% (n = 10). In the mutants, the change in the response over 40 min ranged from 5% potentiation to 8% inhibition. MTSEA (in the absence of ACh) and MTSET, but not MTSES, caused about a 15% irreversible inhibition of wild-type receptor when tested at the EC_{50} (Figures 3 and 4) but not when tested at saturating concentrations of ACh.

The test responses before and after reagent were elicited with 20 μM ACh, as previously (9), and also with ACh at the EC_{50}. Mostly the reactions caused changes in the EC_{50} for ACh and not in the maximum current elicited by saturating concentrations of ACh. Thus, we tested for effects at the EC_{50} for ACh, which was not only more sensitive than testing at 20 μM ACh, but it also provided a more consistent basis for the comparison of different mutants.

In the absence of ACh, in the closed state of the channel, a 1-min application of 2.5 mM MTSEA had statistically significant effects only on βF224C and βL226C (Figure 3A). A 5-min application of MTSEA to these mutants did not increase the effects, indicating that the reactions had gone to completion in 1 min (Figure 3B). These effects, potentiation of βF224C and inhibition of βL226C, were seen by testing at the EC_{50} for ACh; the responses to 20 μM ACh, 14 and 50 times the EC_{50} for these two mutants, were not significantly altered by the reaction.

In the presence of ACh, when the channels were conducting microamps of current, a 1-min application of MTSEA had statistically significant effects on βF224C, βL226C, and βV229C (Figure 3C). βV229C was reactive only in the presence of ACh. We tested whether the lack of an effect on βV229C of MTSEA in the absence of ACh was due to the lack of reaction or to the lack of a functional effect of the reaction. We exposed βV229C to 2.5 mM MTSEA for 5 min in the absence of ACh; this failed to block the SH because subsequent exposure to 2.5 mM MTSEA in the presence of ACh for 1 min still resulted in irreversible potentiation (data not shown). The potentiation of βV229C was seen when the test concentration of ACh was at the EC_{50} but not at 20 μM (14 times the EC_{50}), consistent with the reaction causing a shift of the dose−response curve to lower concentrations without a change in the maximum current at saturating concentration of ACh.

Reactions with MTSET

MTSET is a permanently charged quaternary ammonium derivative and is bulkier and more rigid than MTSEA. We

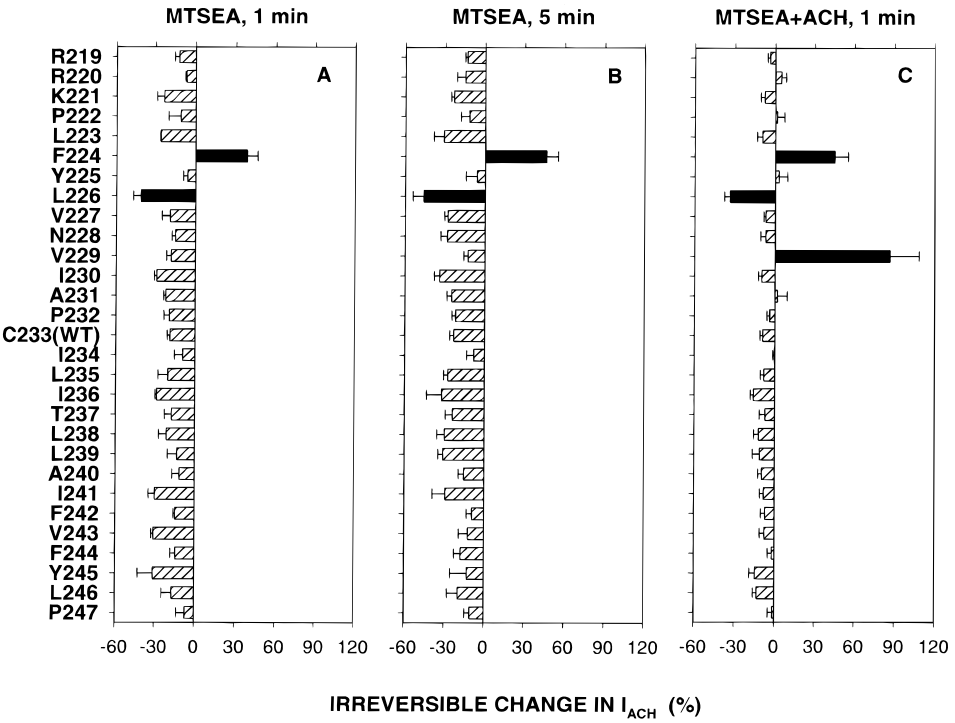

FIGURE 3: Irreversible effects of MTSEA on Cys-substituted β mutants. ACh-induced currents were recorded in oocytes expressing either all wild-type subunits or wild-type α, γ, and δ, and cysteine-substituted β subunits. The effects are calculated as $[(I_{ACh,after}/I_{ACh,before}) - 1] \times 100$. MTSEA was applied at 2.5 mM for the times shown above the panels. MTSEA was applied with ACh (at a concentration $\geq 5 \times EC_{50}$) in the experiments in the right panel. The test concentrations of ACh were at the EC_{50} for the particular mutant. The means and SEMs are shown. For each mutant and condition, at least three oocytes, from two independently injected batches, were tested. A black bar indicates that the effect was significantly greater for the mutant than for the wild type at the level of $P < 0.05$ by ANOVA (Dunnett test).

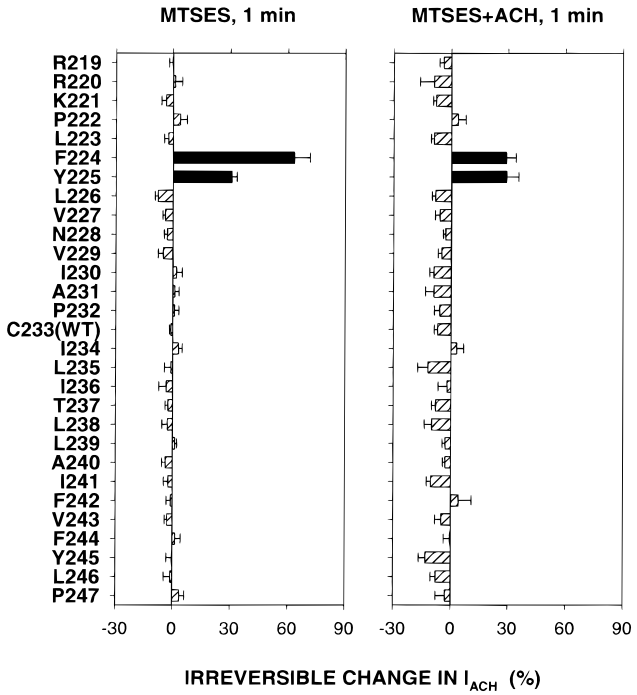

FIGURE 4: Irreversible effects of MTSES on the β mutants. MTSES at 10 mM was applied for 1 min either in the absence or in the presence of ACh at a concentration $\geq 5 \times EC_{50}$. The effects were calculated and represented as in Figure 3.

tested the susceptibility to MTSET only of those mutants that reacted with MTSEA. Since MTSET acts as a low-affinity agonist of wild-type and mutant receptors (*9*), 10 μM *d*-tubocurarine (dTC) was added with MTSET to inhibit its binding to the ACh binding site. In the presence of dTC, a 1-min application of 1 mM MTSET had a significant effect only on βF224C, the response of which was potentiated 40% ± 11% ($n = 4$). In the presence of ACh, a 1-min application of 1 mM MTSET had significant effects on βF224C (potentiation of 31% ± 7%, $n = 3$) and on βL226C (inhibition of 25% ± 5%, $n = 6$). Again, these effects were significant only when the ACh test concentration was the EC_{50}. βV229C, which reacted with MTSEA in the presence of ACh, was not significantly affected by MTSET in the presence of ACh. The lack of an effect of MTSET plus ACh was due to a lack of reaction, because MTSEA plus ACh added subsequently to MTSET still caused a large potentiation.

Reactions with MTSES

The negatively charged MTSES, added either in the absence or in the presence of ACh, significantly potentiated both βF224C and βY225C, tested at the EC_{50} (Figure 4). The reaction of MTSES with βY225C was surprising because MTSEA did not react with this mutant. In all other Cys-substitution mutants in α and in β, MTSEA had an effect if any other reagent had an effect. The lack of the effect of MTSEA on βY225C was in fact due to the lack of reaction, because MTSES added after MTSEA still had a significant effect (data not shown).

Voltage Dependence of the Reaction-Rate Constants at βV229C

The electrostatic potential drop through the channel from the extracellular to the intracellular side is the voltage clamp holding potential (ψ_M). As a further test of the location of a substituted Cys in the ion-conducting pathway and to estimate the electrical distance to the Cys, we determined

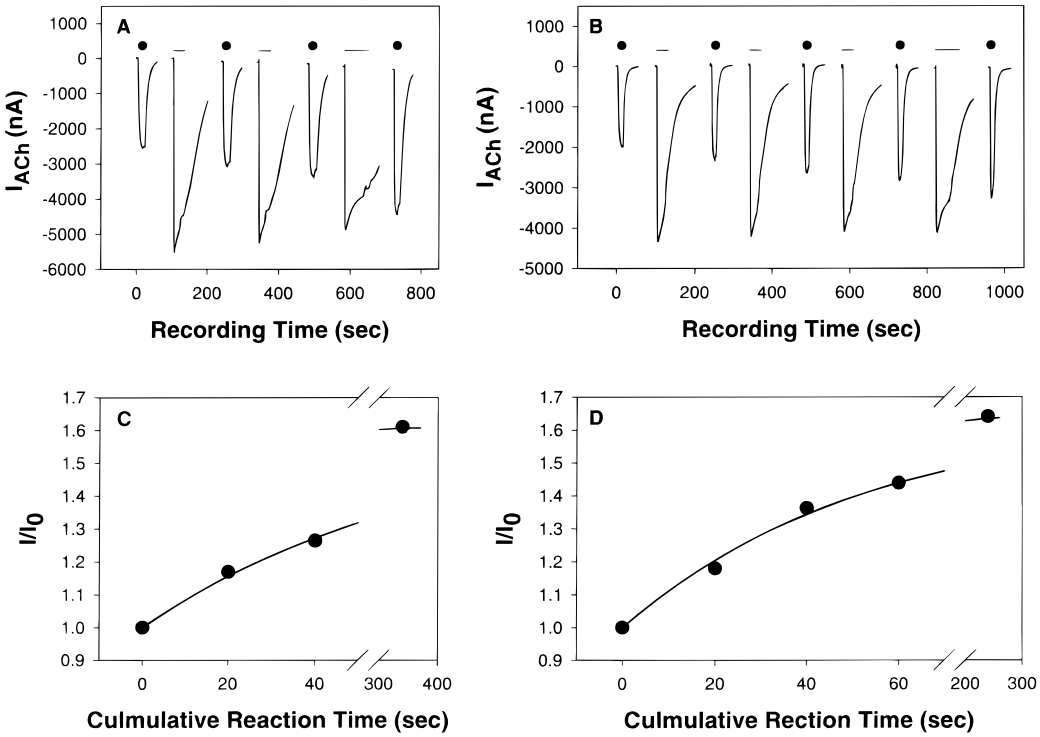

FIGURE 5: Kinetics of AEAETS and of MTSEH effects on βV229C in the presence of ACh. (A) Application of 2 μM ACh for 15−20 s (dot above current trace) alternated with the application of 1 mM AEAETS plus 20 μM ACh for 20 s (line above current trace), except the last time 5 mM AEAETS plus 20 μM ACh was added for 1 min. Between each application, the oocyte was superfused with Ringer's solution for 3 min after the test responses and for 7 min after application of AEAETS plus ACh. (B) The protocol was the same as in A, except that 2 mM MTSEH plus 20 μM ACh was applied for 20 s three times and finally 8 mM MTSEH plus 20 μM ACh was added for 45 s. The wash after MTSEH plus ACh was for 5 min. (C) The potentiation of the test responses as a function of the cumulative exposure to AEAETS, except the last point is plotted at the equivalent time for a 1 mM AEAETS concentration (i.e., $5 \times 60 + 40$ s). The data, taken from A, are represented as filled circles, and the line is the fit of the first-order kinetic equation. (D) The potentiation of the test responses as a function of the cumulative exposure to MTSEH. The last point is plotted at the equivalent time for a 2 mM MTSEH concentration (i.e., $4 \times 45 + 60$ s). The data, taken from B, were fit by the first-order kinetic equation. The holding potential in these experiments was −40 mV. The data in A and C, and in B and D, are from single representative experiments.

as a function of ψ_M the rates of reaction of βV229C with the positively charged MTSEA and AEAETS and with the neutral MTSEH. MTSEA is predominantly positively charged at neutral pH and permeates through the open channel (*9*). AEAETS is a larger, diamino derivative, which should have a mean charge close to +2 at neutral pH. MTSEH is polar but neutral and should not be affected directly by ψ_M.

Each of these reagents, when added in the presence of ACh, had a large, irreversible, potentiating effect on βV229C. The maximum increase in current was 70% ± 6% ($n = 7$) for MTSEA, 72% ± 7% ($n = 5$) for AEAETS, and 76% ± 6% ($n = 5$) for MTSEH. The size of these effects made the determination of the rates of reaction feasible. In the absence of ACh, neither MTSEA (2.5 mM for 5 min; Figure 3), MTSEH (10 mM for 1 min), nor AEAETS (2 mM for 1 min) had a significant effect on βV229C.

The responses to test pulses of ACh increased with the cumulative time of exposure to reagent, as illustrated for AEAETS (Figure 5A) and for MTSEH (Figure 5B). These currents could be fitted by a first-order kinetic equation (see Experimental Procedures), as illustrated for individual experiments in Figure 5C and 5D. In these experiments, at $\psi_M = -40$ mV, the second-order rate constants were 15 and 10 M^{-1} s^{-1} for AEAETS (Figure 5C) and for MTSEH (Figure 5D), respectively.

The log of the mean rate constants for the reactions of MTSEA, AEAETS, and MTSEH were plotted as a function of ψ_M (Figure 6). For AEAETS, but not for MTSEA and MTSEH, the rate constants were significantly dependent on ψ_M. The slopes of log(k) versus holding potential yields an estimate for the charge of the reagent times the electrical distance to its site of reaction ($z\delta$) (see Experimental Procedures). The least-square fits yield $z\delta$ values of 0.26 ± 0.01 for AEAETS, 0.09 ± 0.06 for MTSEA, and −0.05 ± 0.02 for MTSEH.

DISCUSSION

Probing Cys-Substitution Mutants

As we and others have observed previously (for example, ref 26), Cys is a highly tolerated substitute for other residues. In the ACh receptor, all 28 consecutive Cys substitutions in and around βM1 resulted in subunits that formed functional receptors when expressed with wild-type α, γ, and δ subunits. There were relatively small changes in the EC_{50} and I_{max} of most mutants (Figure 2). The small effects of the substitution of Cys on function indicate that the position of the substituted Cys residues were likely to be quite similar to the position of the replaced wild-type residues. The largest changes resulted from the mutations of βR220, βP232, and βP247, which align with α residues that did not tolerate mutation (*6*, *15*). The more drastic effects of these mutations in α than in β are probably due to the double representation of the α subunit in the receptor complex.

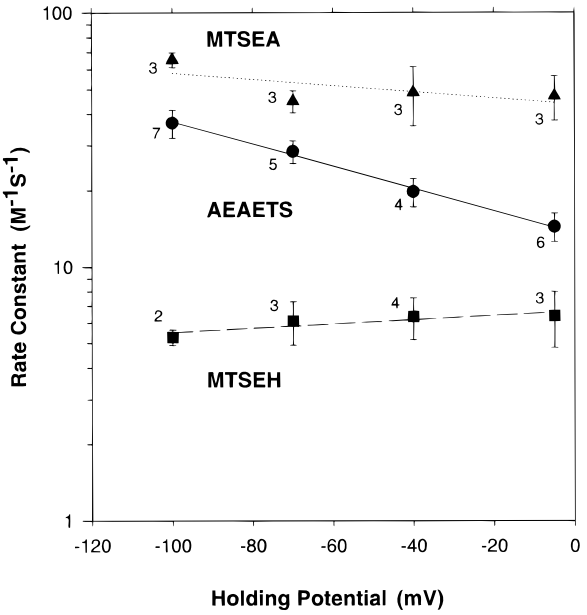

FIGURE 6: Dependence of the rate constants for the reactions of AEAETS, MTSEA, and MSTEH with βV229C on membrane potential. Second-order rate constants (k) were determined from experiments such as those shown in Figure 5, at different holding potentials. At each holding potential, two to seven independently determined k were averaged. The log(mean k) for MTSEA (triangles), MTSEH (squares), and AEAETS (circles) are plotted as a function of the holding potential, ψ_M. The lines were from the fit of $\log(k) = \log(k_0) - 2.303z\delta F\psi_M/RT$ to the data points.

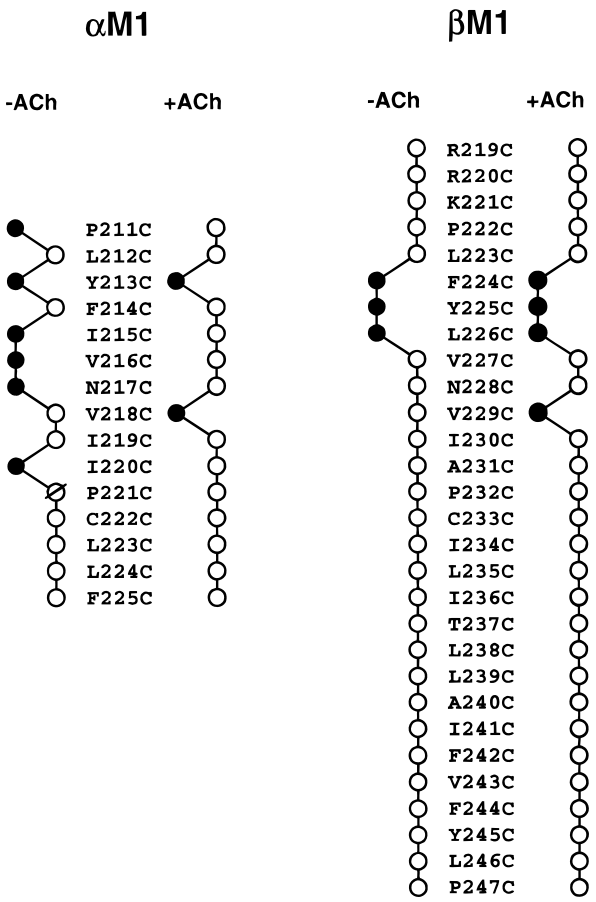

FIGURE 7: Comparison of the susceptibilities of the cysteine-substituted M1 segments of the α and β subunits to reaction with the MTS reagents in the presence and absence of ACh. The portion of αM1 that was tested, and βM1, tested in this paper, are aligned. In each sequence, the mutants that were susceptible to the MTS reagents are represented by filled circles and those not susceptible, by open circles. The β mutants were tested at ACh concentrations equal to the EC_{50} (this paper); all of the α mutants were tested at 20 μM ACh. αP221C did not give a functional channel (*18*).

We probed each of the mutants for its reactivity with MTS reagents. We infer that a substituted Cys reacted with a MTS reagent if the reagent had an irreversible effect on the ACh-induced current that was statistically significantly greater than the effect on the wild-type receptor. We use concentrations and times of application of the reagents that in the past have given maximum effects on susceptible residues. In αM1 and αM2, these effects were mostly inhibitory, but in only one mutant, αT244C, was the ACh-induced current blocked completely. Furthermore, in some mutants the reactions resulted in a potentiation of the response to ACh, which could be ascribed to a decrease in the EC_{50} for ACh. There are two uncertainties. One is that we cannot rule out silent reactions that appear to have no functional consequences, and, therefore, we must be cautious in our interpretation of apparently unreactive residues. (It would be surprising, for example, if βR219C, βR220C, and βK221C were all inaccessible, since the wild-type side chains, albeit longer than the Cys side chain, are likely to be exposed to water.) Another is that in comparing significant and insignificant effects, we are comparing rates of reaction qualitatively. In most cases, however, we do not know the actual rates, which for small effects would be difficult to determine.

Of the 28 mutants tested, only three reacted with MTSEA: βF224C and βL226C, in both the absence and the presence of ACh, and βV229C, only in the presence of ACh (Figure 3 and 7). The negatively charged MTSES reacted with βF224C and βY225C, in both the absence and the presence of ACh. The three residues that reacted with MTSEA were also tested for reaction with the quaternary ammonium MTSET, in the presence of dTC, to suppress the low-affinity agonist activity of MTSET, and in the presence of ACh. βF224C reacted both in the presence of dTC and in the presence of ACh, βL226C reacted only in the presence of ACh, and βV229C gave no detectable reaction in the presence of dTC or of ACh. βV229C did, however, react with two other reagents, the neutral MTSEH and the doubly positively charged AEAETS, but only in the presence of ACh.

We conclude that βF224C, βY225C, βL226C, and βV229C, are exposed in the channel in at least one of its functional states. We base these conclusions on certain assumptions about the reactions of the substituted Cys with the MTS reagents (*9*). The SH of the substituted Cys are in one of three protein environments: at the water-accessible surface, buried in the protein interior, or at the lipid-exposed surface. We assume that in the membrane-spanning domain of the receptor, the lining of the channel is likely to be the only water-accessible surface. We assume also that the methanethiosulfonate derivatives, which are highly polar and prefer a high-dielectric, aqueous environment, will be present at much higher concentration in the vicinity of the water-accessible Cys than elsewhere. Nevertheless, MTSEA, presumably as a neutral, deprotonated amine, can enter and permeate the lipid bilayer (*27*), and the neutral MTSEH probably can permeate the lipid bilayer as well. MTSET and MTSES, which are fully charged, are much less lipid permeant than MTSEA. Even if the MTS reagents are present at low concentration in the lipid bilayer, their reaction

there will be much slower than in an aqueous environment, because methanethiosulfonates react 9 orders of magnitude faster with ionized $-S^-$ than with un-ionized SH (*12*), and ionization is suppressed in nonpolar environments. Thus, we assume that the MTS reagents react much faster with Cys at the water-accessible surface than with Cys either in the protein interior or in contact with lipid.

The MTS reagents are small enough to access Cys exposed in the channel. MTSEA, MTSET and MTSES, each can fit into a cylinder approximately 10 Å long and 6 Å in diameter. Also, as measured by reversal potentials, MTSEA and MTSET are permeant through the open ACh receptor channel (*9*). In addition, we used two new compounds, AEAETS and MTSEH. The first is a diamino compound, which should have a net charge close to +2 at neutral pH. In its fully extended configuration, it is longer than the other thiosulfonates, fitting into a cylinder approximately 6 Å × 13 Å. Its reaction with Cys gives the same product as the reaction of MTSEA, i.e., $-NHCH(CO^-)CH_2S-SCH_2CH_2-NH_3^+$. MTSEH is the same size as MTSEA and should have similar access to residues in the channel. It adds $-SCH_2-CH_2OH$ to the Cys SH. All of these reagents react very rapidly with small thiols in solution (*11*).[2]

Differences in size and flexibility of these reagents is reflected in differences in their rates of reaction. At zero membrane potential, the rate constant for the reaction of MTSEA with βV229C is 3.3 times the rate constant for the reaction of the larger AEAETS, whereas MTSEA reacts $^1/_3$ as fast as AEAETS with 2-mercaptoethanol in solution.[2] Also, MTSET, which is bulkier and more rigid than MTSEA, does not detectably react with βV229C. Hence, it appears that access of the bulkier reagents is restricted. It should be noted also that the rate constants for all of the reagents are 3 orders of magnitude smaller for reaction with βV229C than for reaction with 2-mercaptoethanol in solution. For MTSEA, the rate constants are 50 M^{-1} s^{-1} with βV229C and 70 000 M^{-1} s^{-1} with 2−mercaptoethanol. For comparison, the rate constants for the reaction of MTSEA in the presence of ACh with exposed residues in αM2 range from 8 M^{-1} s^{-1} with αS248C (slower than with βV229C) to 12 000 M^{-1} s^{-1} with αT244C.[2] The SH of βV229C appears to be sterically hindered but nevertheless accessible.

Voltage Dependence of the Reaction Rates with βV229C

The dependence on membrane potential of the reaction of a charged reagent with a substituted Cys would be strong evidence that the Cys was in the channel. Such voltage dependence was observed in the channel of the cystic fibrosis transmembrane conductance regulator (*28*). We tested this on βV229C, which was the substituted Cys in βM1 farthest from the extracellular side that was affected by MTSEA. Also, the effect on βV229C was large enough to allow us to follow the kinetics of the reaction with some precision. Neither the rate constant for the reaction with the positively charged MTSEA nor the rate constant for the reaction with the neutral MTSEH was significantly voltage dependent (Figure 6). The rate constant for the reaction with the doubly charged AEAETS, however, was significantly voltage dependent.

These results can be analyzed in terms of a two-barrier, one-well model (*29*) for the kinetics of the reaction of a Cys within a channel as follows:[2]

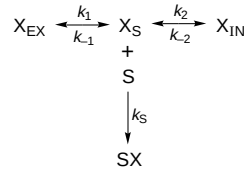

(6)

X_{EX} is the reagent in the extracellular medium, X_{IN}, in the intracellular medium, and X_S, in the channel at the site of reaction. k_1, k_{-1}, k_2, and k_{-2} are the first-order rate constants for the movements of X, from the extracellular medium to S, from S to the extracellular medium, from S to the intracellular medium, and from the intracellular medium to S, respectively. k_S is the second-order rate constant for the reaction of X_S and S. The solution of the differential equations for eq 6 yields

$$s/s_0 = \exp\{-(ak_S/b)[t - (1/b)(1 - \exp(-bt))]\} \quad (7)$$

where $s = [S]$, $x = [X]$, $a = k_1x_{EX} + k_{-2}x_{IN}$, and $b = k_{-1} + k_2$. We consider only conditions in which $x_{IN} = 0$ and, therefore, in which $a = k_1x_{EX}$, and k_{-2} does not enter the equations.

We approximate eq 7 with the simpler exponential decay equation

$$s/s_0 = \exp(-k^*x_{EX}t) \quad (8)$$

where x_{EX} is the fixed extracellular concentration of reagent and k^* is the effective second-order rate constant, given by

$$k^* = k_Sk_1/(k_{-1} + k_2) \quad (9)$$

The error in this approximation is less than $k_Sk_1x_{EX}/(k_{-1} + k_2)^2$, and is smaller the lower the concentration x_{EX}. The error is small when the concentration of X at the site reaches a steady state before much reaction of X with S occurs.

The dependence of k^* on ψ_M, the electrostatic potential difference across the membrane, intracellular minus extracellular, is given by

$$k^* = k_Sk_1^0 \exp(-z\beta\delta\psi_M)/[k_{-1}^0 + k_2^0 \exp(-z\beta\psi_M/2)] \quad (10)$$

where k_1^0, k_{-1}^0, and k_2^0 are the rate constants at $\psi_M = 0$, z is the algebraic charge on X, $\beta = F/RT$, and δ is the electrical distance from the extracellular side to S.

The slope of $\ln(k^*)$ as a function of ψ_M is given by

$$d\ln(k^*)/d\psi_M = -z\beta\{\delta - (^1/_2)k_2^0/[k_2^0 + k_{-1}^0 \exp(z\beta\psi_M/2)]\} \quad (11)$$

From eq 11, we see that the slope is both constant and equal to $-z\beta\delta$ only when $k_2^0 = 0$; i.e., when X can jump from the extracellular medium to S but not from S to the intracellular medium, when X is impermeant. For a permeant, positively charged X, which, for an example, could leave S at the same rate to either side of the membrane ($k_2^0 = k_{-1}^0$), the slope would be small and negative or even positive ($z\delta < 0$) for large, negative ψ_M and larger and negative ($z\delta > 0$) only for large, positive ψ_M. A constant slope equal to $-z\beta(\delta - ^1/_2)$ is characteristic of the condition, $k_2^0 \gg k_{-1}^0$; i.e., a jump from S to the intracellular medium would be much more probable than a jump to the extracellular medium.

Experimentally, s/s_0 is estimated from the current, I, elicited by ACh, before and after the reaction with X, as

$$s/s_0 = (I_\infty - I)/(I_\infty - I_0) \quad (12)$$

where I_∞ is the current after reaction of all channels and I_0 is the current before any reaction.

Another contribution to the dependence of k^* on ψ_M could arise from the dependence of the transitions between functional states of the channel on ψ_M in conjunction with differences in the rate constants for the reaction in the different functional states. In the muscle-type ACh receptor, for example, the closing rate constant is voltage dependent (*30, 31*). Such a mechanism for voltage dependence, however, should affect the reaction rates of neutral reagents, such as MTSEH, as well as the reaction rates of charged reagents, and is ruled out if there is no voltage dependence of the reaction rate of a neutral reagent. The same argument applies to possible voltage dependent changes in the ionization of the target SH.

Thus, the absence of voltage dependence of the reaction of MTSEA (for $\psi_M < 0$) is consistent with the finite permeability of this reagent (*9*). The significant voltage dependence of the reaction of the doubly positively charged AEAETS is consistent with βV229C being within the electrical field established when the channel is conducting ions and with the relative impermeability of AEAETS (i.e., k_2 close to 0). The voltage dependence of AEAETS is not due to voltage dependence of the gating transitions, because such a mechanism would also affect the reactions of MTSEH and of MTSEA, neither of which is voltage dependent. It also is unlikely that the voltage dependent reaction of AEAETS is occurring in the desensitized receptors, present together with the open receptors. In the desensitized receptors, the channels are closed and in a closed channel the reaction of MTSEA should be voltage dependent if the reaction of AEAETS is.

For AEAETS and βV229C, $z\delta = 0.26$, which is the sum of the electrical distances of the two charges of AEAETS. The reactive atom of AEAETS, the divalent sulfur, is in the middle of the molecule, roughly 5 Å from each of the two charged nitrogens. Thus, the SH of βV229C is likely to be at a smaller electrical distance than 0.26. For comparison, $z\delta$ measured for αS248C with AEAETS was 0.20.[2]

Charge Selectivity

The negatively charged MTSES reacted with βF224C and βY225C. In αM1, MTSES reacted with αY213C and αP211C, which align with βF224C and the unreactive βP222C, respectively (Figure 7). Also, MTSES reacted with αE262C and with αV255C, toward the extracellular end of αM2. The third of the channel closest to the extracellular side of the membrane admits anions as well as cations; thus, cation selectivity begins below this region. The preference of βY225C for the anionic reagent MTSES over the cationic MTSEA is a surprising subtlety that may indicate a proximity in the folded structure to one or more of the positively charged side chains of βR219, βR220, or βK221 (Figure 7).

Structure of the Segment

Given the limited number of residues that appear to be exposed and the irregular pattern of exposure, we can not assign a regular secondary structure to the upper end of βM1 (Figure 7). In αM1, three residues in a row also reacted, but these do not align exactly with those in βM1. Also, the pattern of exposure in αM1 was not consistent with an α-helix. The pattern of labeling by a hydrophobic photoactivated reagent of αM1 between αC222 and αL228 was also inconsistent with a regular secondary structure (*32*). In comparing the pattern of reaction in βM1 to that in αM1 (Figure 7), we note that the pattern in α could be a combination of the patterns of the two α-subunits, which might not have identical three-dimensional structures. Nevertheless, the differences in the reactivities of aligned residues in αM1 and βM1 indicate that these segments are not completely symmetrically disposed around the channel.

As in the other segments that have been scanned, there were differences in the reactivity of substituted Cys residues in the presence and absence of ACh. In βM1, the most obvious difference was in the rates of reaction of βV229C with MTSEA in the presence and absence of ACh. No significant reaction could be detected in the absence of ACh with 2.5 mM MTSEA applied for 5 min. Furthermore, the absence of an effect was not due to a silent reaction, because MTSEA applied in the absence of ACh did not reduce the effect of MTSEA applied subsequently in the presence of ACh. Assuming that the largest undetectable effect of MTSEA in the absence of ACh would be a 10% potentiation, we can estimate an upper bound for the rate constant for the reaction in the absence of ACh of 0.1 M^{-1} s^{-1}. We compare this to the rate constant for the reaction in the presence of ACh of 50 M^{-1} s^{-1}; i.e., the rate constant increased at least 500 times in the presence of ACh. ACh induces large currents (microamps) through the mutant receptors but also significant desensitization. We argued above that the voltage dependence of the reaction of AEAETS and the voltage-independence of the reactions of MTSEA and MTSEH are more readily reconciled with reaction in the open state of the channel. Hence, we conclude that βV229C is far more reactive in the open state than in the closed state. In αM1, the substituted Cys αV218C, which aligns with βV229C, also reacted with MTSEA much faster in the presence than in the absence of ACh (*9*), and this reaction also resulted in a large potentiation in the response to ACh.

In βM1, the reactions of three residues, βF224C, βY225C, and βV229C, caused a potentiation of the subsequent responses to ACh (Figures 3−5). This potentiation was due to a shift in the EC_{50} for ACh to a lower concentration (data not shown). In these cases, adding a polar group to a Cys side chain stabilized the open state of the channel relative to its closed state. Of these three, only βV229C appears to be buried in the closed state and exposed in the open state, which would correspond to a movement of this side chain from a less polar to a more polar environment. The aligned residue in αM1, αV218C, and αL251C, αV255C, and αL258C in αM2 also appeared to be more exposed in the open state than in the closed state (*3*). For these residues, the increased reactivity in the presence of ACh probably reflects conformational changes rather than the opening of the gate *per se*, because the gate is closer to the cytoplasmic end of the channel than any of these residues, which are closer to the extracellular end (*3, 9*).[2,3]

ACKNOWLEDGMENT

We thank Myles Akabas, Jonathan Javitch, Juan Pascual, and Gary Wilson for their advice and Gilda Salazar-Jimenez for technical assistance.

REFERENCES

1. Unwin, N. (1993) *J. Mol. Biol. 229*, 1101−1124.
2. Galzi, J. L., and Changeux, J. P. (1995) *Neuropharmacology 34*, 563−582.
3. Karlin, A., and Akabas, M. H. (1995) *Neuron 15*, 1231−1244.
4. Charnet, P., Labarca, C., Leonard, R. J., Vogelaar, N. J., Czyzyk, L., Gouin, A., Davidson, N., and Lester, H. A. (1990) *Neuron 4*, 87−95.
5. Hucho, F., Oberthur, W., and Lottspeich, F. (1986) *FEBS Lett. 205*, 137−142.
6. Imoto, K., Busch, C., Sakmann, B., Mishina, M., Konno, T., Nakai, J., Bujo, H., Mori, Y., Fukuda, K., and Numa, S. (1988) *Nature 335*, 645−648.
7. Pedersen, S. E., Sharp, S. D., Liu, W. S., and Cohen, J. B. (1992) *J. Biol. Chem. 267*, 10489−10499.
8. Revah, F., Galzi, J. L., Giraudat, J., Haumont, P. Y., Lederer, F., and Changeux, J. P. (1990) *Proc. Natl. Acad. Sci. U.S.A. 87*, 4675−4679.
9. Akabas, M. H., Kaufmann, C., Archdeacon, P., and Karlin, A. (1994) *Neuron 13*, 919−927.
10. Akabas, M. H., Stauffer, D. A., Xu, M., and Karlin, A. (1992) *Science 258*, 307−310.
11. Stauffer, D. A., and Karlin, A. (1994) *Biochemistry 33*, 6840−6849.
12. Roberts, D. D., Lewis, S. D., Ballou, D. P., Olson, S. T., and Shafer, J. A. (1986) *Biochemistry 25*, 5595−5601.
13. Dani, J. A. (1989) *J. Neurosci. 9*, 884−892.
14. DiPaola, M., Kao, P. N., and Karlin, A. (1990) *J. Biol. Chem. 265*, 11017−11029.
15. Tamamizu, S., Todd, A. P., and McNamee, M. G. (1995) *Cell. Mol. Neurobiol. 15*, 427−438.
16. Johnson, D. A., and Ayres, S. (1996) *Biochemistry 35*, 6330−6336.
17. Lurtz, M. M., Hareland, M. L., and Pedersen, S. E. (1997) *Biochemistry 36*, 2068−2075.
18. Akabas, M. H., and Karlin, A. (1995) *Biochemistry 34*, 12496−12500.
19. Noda, M., Takahashi, H., Tanabe, T., Toyosato, M., Kikyotani, S., Furutani, Y., Hirose, T., Takashima, H., Inayama, S., Miyata, T., and Numa, S. (1983) *Nature 302*, 528−532.
20. Villarroel, A., Herlitze, S., Witzemann, V., Koenen, M., and Sakmann, B. (1992) *Proc. R. Soc. London B 249*, 317−324.
21. Cohen, B. N., Labarca, C., Czyzyk, L., Davidson, N., and Lester, H. A. (1992) *J. Gen. Physiol. 99*, 545−572.
22. Gu, Y., Forsayeth, J. R., Verrall, S., Yu, X. M., and Hall, Z. W. (1991) *J. Cell Biol. 114*, 799−807.
23. Kreienkamp, H. J., Maeda, R. K., Sine, S. M., and Taylor, P. (1995) *Neuron 14*, 635−644.
24. Kullberg, R. W., Zheng, Y. C., Todt, W., Owens, J. L., Fraser, S. E., and Mandel, G. (1994) *Recept. Channels 2*, 23−31.
25. Liu, Y., and Brehm, P. (1993) *J. Physiol. (London) 470*, 349−363.
26. Kaback, H. R. (1997) *Proc. Natl. Acad. Sci. U.S.A. 94*, 5539−5543.
27. Holmgren, M., Liu, Y., Xu, Y., and Yellen, G. (1996) *Neuropharmacology 35*, 797−804.
28. Cheung, M., and Akabas, M. H. (1997) *J. Gen. Physiol. 109*, 289−299.
29. Woodhull, A. M. (1973) *J. Gen. Physiol. 61*, 687−708.
30. Magleby, K. L., and Stevens, C. F. (1972) *J. Physiol. (London) 223*, 151−171.
31. Auerbach, A., Sigurdson, W., Chen, J., and Akk, G. (1996) *J. Physiol. (London) 494*, 155−170.
32. Blanton, M. P., Li, Y. M., Stimson, E. R., Maggio, J. E., and Cohen, J. B. (1994) *Mol. Pharmacol. 46*, 1048−1055.

BI972357U